SUMMIT

H1618B

5" x 17.88" x 18" (H x W x D)

18" wide convertible range hood for ducted or ductless use in black finish

Highlights:

18" wide range hood is ideal for use over cooktops in smaller kitchens

Black finish and contemporary styling

Convertible from top or rear venting into non-vented recirculating mode

Product Features:

18" width	Designed to match 18 inch wide cooking surfaces; also available in 20, 24, 30, and 36 inch widths
Black finish	White, bisque, and stainless steel also available in same size
Convertible range hood	Use top or rear venting or convert into non-vented recirculating mode
Two-speed fan	Variable speed for more venitlation options
Light	Switchable light offers more convenience in your kitchen
Aluminum-charcoal filter	Provides thorough filtering to reduce odors
Made in the USA	Solidly constructed for years of use
More sizes available	Additional sizes can be specially ordered (minimums apply)

SUMMIT APPLIANCE DIVISION, FELIX STORCH, INC. | ISO 9001:2015 Certified
770 Garrison Avenue Bronx, NY 10474 USA **TEL** 718-893-3900 **FAX** 844-478-8799 info@summitappliance.com **www.summitappliance.com**

SUMMIT

H1618B Specifications:

Overview	
Height of Cabinet	5.0" (13 cm)
Width	17.88" (45 cm)
Depth	18.0" (46 cm)
Cabinet	Black
US Electrical Safety	UL
Canadian Electrical Safety	ULC
Voltage/Frequency	115 V AC/60 Hz
Weight	15.0 lbs. (7 kg)
Parts & Labor Warranty	1 Year
UPC	761101044842

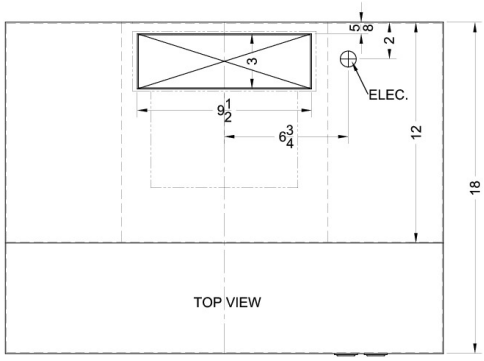

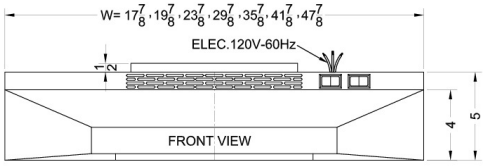

MODEL NO.	WIDTH
H1618	17 7/8"
H1620	19 7/8"
H1624	23 7/8"
H1630	29 7/8"
H1636	35 7/8"
H1642SS	41 7/8"
H1648SS	47 7/8"

SUMMIT APPLIANCE DIVISION, FELIX STORCH, INC. | ISO 9001:2015 Certified
770 Garrison Avenue Bronx, NY 10474 USA **TEL** 718-893-3900 **FAX** 844-478-8799 info@summitappliance.com **www.summitappliance.com**