SUMMIT

FF41

33.25" x 18.75" x 20.25" (H x W x D)

DISCONTINUED: Replaced by FF41ES

Highlights:

Save time and energy with automatic defrost

Door storage provides ample room for large bottles

Compact size fits great in offices and hotel rooms

Product Features:

Slim counterheight dimensions	Less than 20 inches wide to fit tight spots
Automatic defrost	No-frost system simplifies maintenance
Reversible door	Keep your options flexible with a reversible door that's easy to switch when your arrangement changes
Adjustable thermostat	Control your food's temperature with ease and accuracy
Adjustable wire shelves	Rearrange your refrigerator space to accommodate all shapes and sizes or remove shelves for a simple clean-up
Fruit and vegetable crisper	Get the longest life and best taste out of produce by storing it in a convenient slide drawer
Door storage	Store large bottles right on the door for easy access
100% CFC	Our North American-made refrigerator freezers are environmentally friendly because they do not run on ozone-damaging chemicals

SUMMIT

FF41 Specifications:
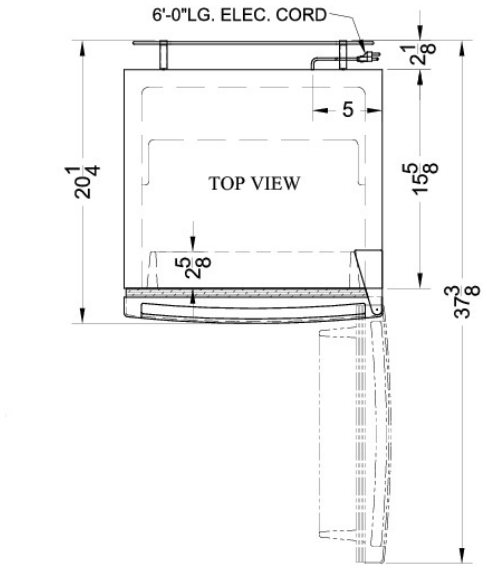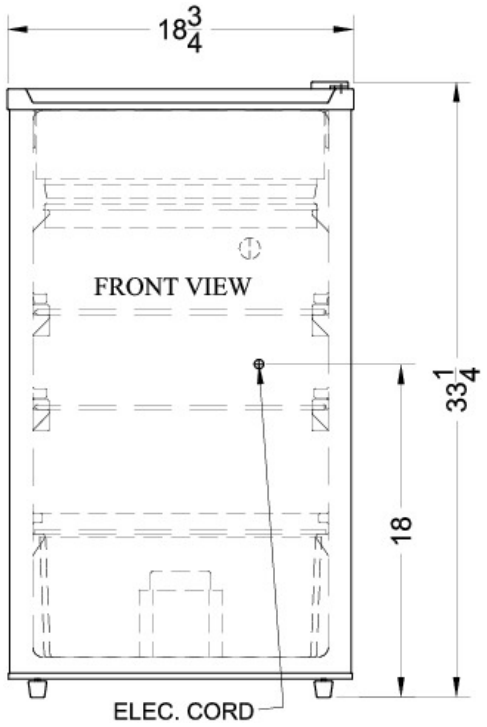
Overview	
Height of Cabinet	33.5" (85 cm)
Height to Hinge Cap	33.25" (84 cm)
Width	18.75" (48 cm)
Depth	20.25" (51 cm)
Depth with Handle	20.25" (51 cm)
Depth with door at 90°	37.38" (95 cm)
Capacity	3.6 cu.ft. (102 L)
Defrost Type	Automatic
Door	White
Cabinet	White
US Electrical Safety	UL
Canadian Electrical Safety	ULC
Energy Usage/Year	371.0kWh/year
Amps	0.8
Parts & Labor Warranty	1 Year
Compressor Warranty	5 Years
UPC	761101012827
Refrigerator-Freezer	
Door Swing	RHD
Reversible	Yes
Adjustable Shelves	Yes
Crisper Qty	1
Crisper Finish	Transparent
Crisper Cover	Glass
Interior Light	Yes
Refrigerator - Shelf Type	Wire
Refrigerator - Shelf Qty	2
Refrigerator - Full Door Shelves	3
Thermostat Type	Dial
Fan Type	Exterior
Refrigerant Type	R134a
High Side PSI	235.0
Low Side PSI	140.0
Level Legs	2