FULL-SIZE COMMERCIAL BEER DISPENSER

Model SBC490 (All Versions)

Use and Care Guide

BEFORE USE, PLEASE READ AND FOLLOW ALL SAFETY RULES AND OPERATING INSTRUCTIONS.

Write Model and Serial Numbers here:

Model # _____

Serial # _____

Find these numbers on back of unit.

Felix Storch, Inc.
770 Garrison Avenue
Bronx, NY 10474
www.summitappliance.com

TABLE OF CONTENTS

Important Safeguards 2

Before Using for the First Time 3
- *We Care About the Environment*
- *Tips for Saving Energy*

Disposing of a Worn-Out Appliance 4

Placing and Installation ..... 4 - 5
- *Choosing the Right Place* 4
- *Applications* 4
- *Connection to Power Supply* ..... 4 - 5

Temperature Control 5
- *How to Adjust the Thermostat*
- *Temperature Selection*

Installation ..... 6 - 7
- *Keg Tapper and Beer Keg* 6
- *Casters (for use as a freestanding beer cooler)* ..... 6 - 7
- *Draft Arm Assembly* 7
- *Guard Rail* 7
- *CO_2 Regulator and CO_2 Cylinder* 7

Parts List 8

Operation ..... 8 - 9
- *Dispensing Beer* ..... 8 - 9
- *Understanding Beer Temperature* 9
- *Beer Serving Tips* 9

Converting the Beer Dispenser to a Beverage Cooler 10

Converting the Beer Dispenser to a Built-In Unit ..... 11 - 12
- *Instructions for Building-In* 12

Maintenance and Cleaning ..... 13 - 14
- *Automatic Defrosting of the Beer Dispenser* 13
- *Installing the Cleaning Kit* 13
- *Cleaning the Appliance* 14

Noise 15

Troubleshooting ..... 16 - 17

Limited Warranty 19

IMPORTANT SAFEGUARDS

WARNING!

To reduce the risk of fire, electric shock or injury when using this appliance, follow these basic precautions:

1. Read all instructions before using the appliance.
2. The appliance must be correctly connected to the power supply.
3. Immediately replace worn power cords, loose plugs and faulty power outlets.
4. Do not operate your appliance in the presence of explosive fumes.
5. Disconnect the appliance from the power supply before cleaning or repairing it. Only a qualified technician should repair it.
6. Never stand on top of or inside this appliance, or swing on the door.
7. To reduce likelihood of injury, do not let children play with this or any other appliance.
8. Do not operate the valve control unless the cylinder is completely installed and connected.

DANGER! ***Risk of child entrapment!***
Child entrapment and suffocation are not problems of the past. Junked or abandoned appliances are still dangerous, even if they will "just sit at the curb for a few days."

Before discarding your old appliance:

- *Take off the door.*
- *Leave the shelves in place so that children may not easily climb inside.*

SAFETY PRECAUTIONS REGARDING CO_2 (CARBON DIOXIDE) GAS

Always connect the CO_2 cylinder to a regulator! Failure to do so may cause an explosion resulting in possible injury or death when the cylinder valve is opened.

Never connect the CO_2 cylinder directly to the product container.

Always keep CO_2 cylinders away from heat. Store extra cylinders in a cool place (preferably below 70°F). Securely fasten cylinders with a chain in an upright position when storing.

Never drop or throw a CO_2 cylinder.

Always check the D.O.T. (Department of Transportation) test date on the cylinder neck before installation. If it has been more than 5 years, do not use. Return the cylinder to your gas supplier.

Never connect a product container unless there are at least two safety devices in the pressure system: one on the CO_2 regulator and the other on the product container or in the pressure gas line.

SAVE THESE INSTRUCTIONS

BEFORE USING FOR THE FIRST TIME

These instructions are important, and we request you read them before using this beer dispenser. They describe the appliance and the correct and safe way to use it.

The instructions were prepared for various models so you may find descriptions of some accessories and functions that do not apply to yours. Every model of the SBC490 can be converted into a beverage cooler. These units are designed for beer and beverages only, and are not recommended for perishable foods such as meats or dairy products.

Before connecting the appliance to the power supply, leave it standing for a least 8 hours. This allows the refrigerant to drain back into the compressor and reduces the risk of malfunctions in the cooling system caused by shipping.

Clean the appliance thoroughly, especially the interior. (See *Maintenance and Cleaning*.) Proper grounding must be ensured to reduce the risk of shock and fire. Do not cut or remove the grounding plug! Connect to a 120V, 60Hz grounded AC outlet having a minimum 15 amps. Do not use an extension cord. Use a three-prong plug with a three-prong grounded wall outlet. If you do not have one, have a certified electrician install the proper outlet.

WE CARE ABOUT THE ENVIRONMENT

Our appliances are distributed in packaging made of environmentally friendly materials which can safely be recycled, disposed of or destroyed with minimal environmental effects. Our instruction manuals are printed on recycled paper or chlorine-free bleached paper.

TIPS FOR SAVING ENERGY

Try not to open the door too often, especially when the weather is hot and humid. Once you open the door, try to close it as soon as possible.

If possible, disconnect the power before changing a keg of beer.

For built-in models (model number contains “BI”): While these units are designed for under-counter use and the compressor cooling is fan-assisted, an air gap of 2” between the rear of the unit and the wall or counter surface behind is strongly recommended. This will enhance cooling and reduce energy waste. Also leave at least 3/16” on both sides and 1/16” at the top. Be sure that airflow under the appliance is not blocked.

For free-standing models (model number does not contain “BI”): Your appliance is not designed to operate in enclosed spaces. When placing your unit, make sure you allow at least 4” of clearance at the sides, rear and top to allow for adequate airflow.

Set the thermostat from a higher to lower setting whenever possible, depending on how full the appliance is or what the ambient temperature is.

Keep the unit out of direct sunlight.

Periodically, check that the beer dispenser seals well and none of the contents prevent the door from closing.

DISPOSING OF A WORN-OUT APPLIANCE

- When your appliance finally wears out, dispose of it.
- Before you dispose of your old appliance: Take the door or doors off but leave the shelves and drawers in place so that children cannot easily climb inside.
- The refrigerating system of the appliance is filled with refrigerant and insulating substances which should be separately recycled. Either have a licensed appliance repair company or dealer remove the appliance or call your local recycling office for the appropriate disposal information.
- For the sake of environmental protection, be careful not to damage the rear wall of the appliance (the condenser unit or the tubes when moving the appliance) or any part of the refrigeration system inside the appliance.
- This beer dispenser is 100% CFC-free, but the coolant is under pressure and puncturing the sealed system could be dangerous. The coolant used in the sealed system is non-toxic.
- Many older appliances may contain refrigerants that are harmful to the environment, and should be recycled by a lawfully licensed company.

PLACING AND INSTALLATION

Choosing the Right Place

To ensure that your beer dispenser works at the maximum efficiency it was designed for, install it in a location where there is proper air circulation and electrical connections.

Choose a location where the beer dispenser will be away from heat and will not be exposed to direct sunlight.

Models SBC490OS, SBC490OS7, SBC490OSTWIN, and SBC490OS7TWIN are UL-approved for outdoor use. All other SBC490 models are designed for commercial use indoors only and should not be used outdoors.

Applications

All SBC490 beer dispensers meet UL Commercial Standard 471 and are designed for commercial use. Model names that include a ‘7’ (SBC4907, SBC490BI7, SBC490OS7, etc.) are ETL-Sanitation listed to NSF-18 for use in foodservice applications.

Connection to Power Supply

Connect this appliance to a 3-prong power supply socket outlet (which has a ground terminal). If you only have a two-prong outlet, have it replaced by a qualified technician with an outlet that meets the local codes.

➢➢➢ DO NOT USE AN EXTENSION CORD ≺≺≺

Required nominal voltage and frequency are indicated on the rating plate. The connection to the power supply and grounding has to be made according to current standards and regulations.

The appliance resists temporary voltage fluctuations with a tolerance of -15 to 10%. On model SBC490OS only, a GFCI (ground fault circuit interrupter) is built into every line cord. In the event the cooler is not operating, first check to see that the GFCI has not tripped, then press the reset button.

TEMPERATURE CONTROL

How to Adjust the Thermostat

The beer dispenser is controlled with a thermostat knob located inside the unit, towards the right-hand corner. Turn the knob clockwise from the **STOP (0)** position toward higher numbers for colder temperatures. Place the drip tray under the beer faucet.

The recommended pressure for the CO_2 system is 8-10 lbs.

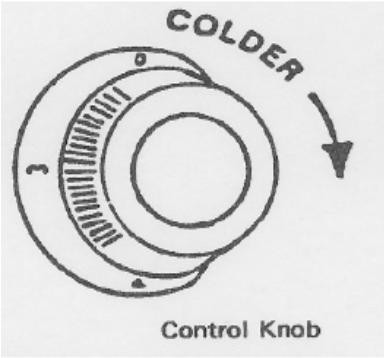

Temperature Selection

The settings of the temperature control are from **0** (OFF) to **7** (MAX). Initially adjust the temperature control setting to **4** (NORMAL), then adjust the thermostat to colder or warmer (as needed).

A higher setting on the knob (towards **7**) means colder temperatures in all compartments of the appliance. On the highest setting, parts of the beer dispenser may become extremely cold, especially in cooler or dry weather. Use the higher thermostat setting only when required or recommended.

The coolness of the beer dispenser depends on how often you open and close the door.

To turn the unit off, you must turn the thermostat to 0 (OFF).

INSTALLATION

<u>Unless the model number includes the letters "BI" (for "built-in")</u>, your appliance is not designed to operate in enclosed spaces. When placing your unit, make sure you allow at least 4" clearance on both sides, rear and top to ensure adequate airflow.

Remove all packing materials and parts. Inspect to make sure all parts listed on page 8 are present.

Keg Tapper and Beer Keg

The Sankey type keg tapper supplied with the beer dispenser is the most widely used in the United States. However, other types of keg tappers can be used. Before installing a keg tapper, check with your beer distributor to make sure that the Sankey type keg tapper can be used.

If you need a keg tapper other than a Sankey type, it is recommended that you purchase the tapper you need from your beer distributor. Please keep the Sankey type keg tapper for future use. The Sankey system is becoming more popular to use. It may be purchased from our Sales Department at **718-893-3900**.

- Make sure the shutoff valve on the CO_2 regulator is in a closed position. Connect the pressure tube to the nipple of the keg tapper (use hose clamp). Connect the beer tube from the draft arm to the keg tapper. (Fasten securely with washer and wing nut.)
- Make sure the beer faucet and keg tappers are in a closed position, and then tap the keg. Open the keg tapper valve.
- Make sure the keg is properly tapped, and then open the shutoff valve on the CO_2 regulator.

<u>To install the beer keg into the cabinet, follow the steps below</u>:

1. Lean the keg on the front bottom edge of the cabinet.
2. Move the keg to an upright position, then slide it into the cabinet. (Use the stainless steel floor to avoid damaging the unit).
3. Make sure the keg and beer tube do not touch the cold plate.
4. The keg and keg supports should be properly positioned in order for the door to remain closed.
5. Release the air caught in the draft arm assembly by opening the beer faucet until foam appears.

Casters (for use as a freestanding beer cooler)

Empty the cabinet and lay down the beer dispenser sideways so the door hinge side is at the top. Be careful not to cause dents or scratches on the cabinet. Placing a soft cloth or cardboard underneath the cabinet is recommended.

Install casters, and turn the nuts clockwise to tighten.

Once all four casters have been tightened evenly, stand the cabinet in an upright position.

Note: Allow the beer dispenser to stand in an upright position for 8-10 hours before turning on.

Draft Arm Assembly

1. Slide gasket over wing nut on bottom of draft arm assembly beer tubes. Slide gasket up beer tube to draft arm base.
2. Push wing nut on beer tube of draft arm assembly through hole in top of cabinet until the draft arm is resting on cabinet top.
3. Align holes in draft arm base with holes in gasket and pilot holes in cabinet, then secure guard rail to cabinet top (see below).

Guard Rail

1. Place guard rail on top of cabinet.
2. Fit the legs of the guard rail into the prepared holes in the cabinet top.
3. Secure the guard rail to the cabinet with the eight small Phillips-head screws.

CO_2 Regulator and CO_2 Cylinder

Note: Your CO_2 cylinder is shipped empty to avoid any possible accidents during transportation. When you purchase the first keg of beer, have your beer distributor fill the CO_2 cylinder. You must read and understand the following procedures for CO_2 cylinders before installation:

1. Install the CO_2 gas line tube to the regulator by attaching one end of the red tube to the hose connection on the CO_2 regulator.
2. Secure the tube by using one of the self-locking black plastic snap-on clamps.
3. Insert a special washer into the regulator-to-cylinder attachment nut.
4. Attach the CO_2 regulator to the CO_2 cylinder by screwing the regulator nut onto the cylinder valve and tightening with an adjustable wrench.
5. Remove the bolt with the nut from the cylinder retainer. Using two screws, attach it inside the unit on the left side of the back wall. Holes are pre-drilled and screws are included.
6. Slide the cylinder through the retainer and secure it with the bolt and the nut. Position the cylinder this way so that you will be able to read the numbers on the gauges and easily access the shut-off valves.

PARTS LIST

Unpack and inspect the various parts of this unit

Remove all packing materials and parts. Inspect to make sure all parts listed below are present.

1 Draft arm assembly (with washer)

1 CO_2 cylinder

1 CO_2 regulator

1 Keg tap (American Sankey type)

1 Cleaning kit

Vinyl tubing

1 Stainless steel (removable) floor to protect the unit during keg insertion

1 Guard rail

1 Drip tray

4 Casters (for conversion to portable beer cooler)

2 Hose clamps

2 Removable shelves (installed) for conversion to a beverage cooler

8 Small Phillips-head screws

4 Large Phillips-head screws

2 Retainer fixing screws

OPERATION

Dispensing Beer

Follow these steps to dispense beer:

1. Make sure the beer dispenser is plugged in properly to a 120V, 60Hz, 15 amp grounded AC outlet.
2. Place the drip tray under the beer faucet.
3. Open the beer faucet by pulling the tap towards you quickly and completely to dispense the beer.
4. Increase the pressure if the beer runs too slowly. At the correct pressure and temperature, a 10-oz glass should be filled in 4 seconds.

5. Hold the glass steady at a 45° angle. When it is 2/3 full, start straightening the glass. Proper foam should be a tight, creamy head and the collar on an average glass should be 3/4" to 1" high.

Note: It is normal to see condensation forming on the faucet. It is caused by the difference in temperature between the cold beer and the inner surfaces of the faucet when beer is flowing through the line.

Understanding Beer Temperature

The recommended temperature for serving chilled beer is between 38° and 43°F. To maintain this temperature in average room conditions of 70°F, set the thermostat dial to **4** (NORMAL).

Notes: During the summertime when temperatures are warmer, we recommend that you adjust the control to a cooler setting. Selecting and maintaining the proper temperature inside the cabinet is necessary for maintaining the flavor and freshness of beer. Excessively cold or warm temperatures inside the cabinet may cause a loss of flavor.

The best temperature for storing a keg is approximately 38°F.

Sour beer is produced as a result of secondary fermentation above 45°F.

Beer Serving Tips

The following tips will help you serve the perfect beer. To serve beer from the tap similar to the way it left the vat, check the following:

- Cleanliness (see *Maintenance and Cleaning*)
- Temperature (see *Temperature Selection* and *Understanding Beer Temperature*)
- Pressure (see *Troubleshooting*)
- Use only CO_2 gas

CONVERTING THE BEER DISPENSER TO A BEVERAGE COOLER

For your convenience, this beer dispenser can be converted to a beverage cooler application. Simply follow the steps below for a quick and easy conversion.

Note: When using as a beverage cooler, we do not recommend the use of casters, since stored items may fall off the shelves when the unit is in motion.

1. Disconnect the power supply to the unit.
2. Close the main valve on the CO_2 cylinder.
3. Close the connection between the beer keg and the keg tap by pulling and lifting the handle of the keg into an upright position.
4. Disconnect both the beer line and the CO_2 gas line from the keg tap.
5. Remove the beer keg from the cabinet.
6. Disconnect the gas line from the CO_2 regulator.
7. Remove the CO_2 cylinder from the cabinet.
8. Remove the beer tower from the cabinet top by unscrewing 4 screws.
9. Pull the beer line through the top of the cabinet.
10. Install the cabinet plug on the worktop.
11. Lay the unit down sideways. We recommend that you place a piece of cardboard or cloth underneath the cabinet to avoid dents or scratches to the cabinet. Remove the casters and install leveling legs and raise the unit back into the upright position.
12. Install the two wire shelves.
    a. Insert one end of each support pin into the holes on the right side of the cabinet.
    b. Place one end of the wire shelf into the left side of the cabinet and rest the other end onto the exposed support pins on the right side.
    c. Repeat with the second shelf.
13. The conversion process is now complete. Store all removed accessories in a safe place for future use.
14. Adjust the temperature of the unit as required for beverage storage.

Note: Allow the beer dispenser to stand in an upright position for 8 hours before turning on the power.

CONVERTING THE BEER DISPENSER TO A BUILT-IN UNIT

For your convenience, we offer beer dispensers that can be quickly built in under your counters. Simply follow the steps below for a quick and easy installation.

Note: Not all models have built-in capability. Only models with letters BI are built-in compatible. These units are especially built with additional features for those customers who wish to install this unit under their counter. We do not advise that other models be built in under your counter.

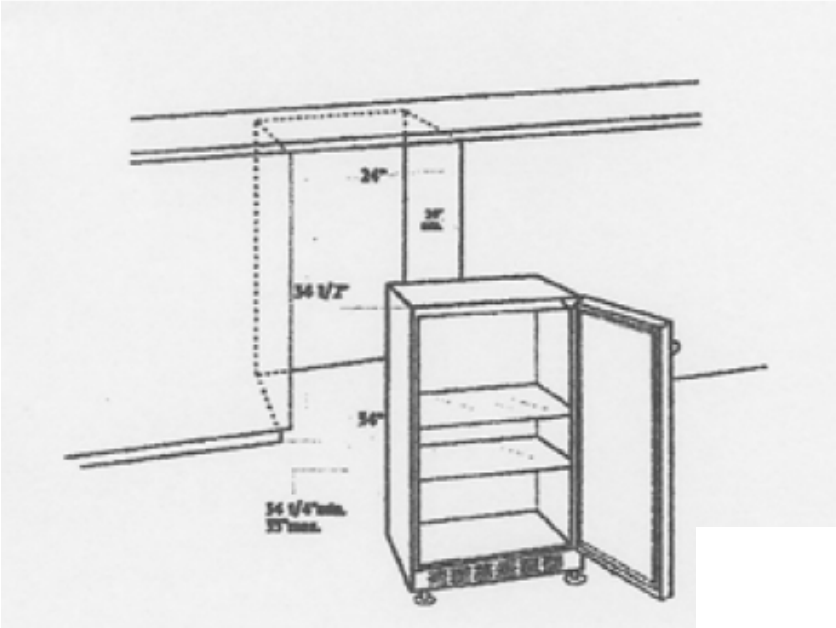

The dimensions of your unit are:

Height: 34¼" (cabinet with leveling legs)

Height: 49¾" (with beer tower)

Width: 23⅝"

Depth: 24⅝"

Make sure the available space is adequate. Allow at least 3/16” clearance on both sides, 2” at the rear and 1/16” at the top. Be sure that airflow under the appliance is not bloacked.

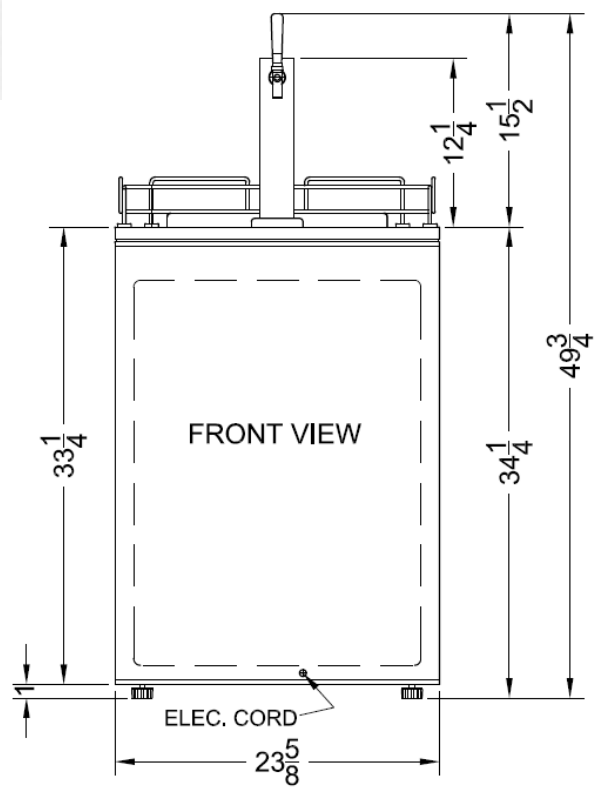

Instructions for Building-In

Find the mid-point:

From left to right the width is about 24". From back to front, the dimension is about 25". Therefore the mid-point is located wherever these coordinates cross each other. Use a pencil or marker to note this spot.

Note: 12 inches from left to midpoint.

12 inches from right to mid-point

12½ inches from front to mid-point.

Drill a round hole:

Place a drill bit on the mid-point and make a round hole with a diameter of 1⅞".

Installation:

See Installation instructions in this manual.

Notes on Energy Consumption

This product is designed for commercial use and is UL approved to standard 471 (commercial refrigeration). It features an upgraded cooling system over units designed for household use. At national average electric rates it will use less than $1 per month more in electricity than household units. Models with the "7" suffix in the model number are designed or modified specifically to meet NSF standards for foodservice and commercial. ETL certifies these "7" models and they are marked ETL Sanitation (to NSF standard 18), but that modification does not affect energy consumption.

Tips to save energy and maintain optimum performance:

When positioning this unit: if used freestanding allow 2 inches of clearance on the sides and 4 inches in the rear for sufficient airflow. Only use under a bar or counter if your unit has the suffix "BI" in the model number. When doing so, the unit is designed to fit in an opening at least 24 inches in width. Allow a 3/16 inch minimum on either side of the unit, a 2 inch clearance with the back wall, a 1/16 inch clearance at the top and a 1 inch clearance beneath the unit for air flow.

MAINTENANCE AND CLEANING

Automatic Defrosting of the Beer Dispenser

There is usually no need to defrost the beer dispenser because the ice deposited on the inner back wall is automatically defrosted. Ice deposits on the inner back wall during compressor operation. Later on, when the compressor is not operating, the ice defrosts and water drains through the outlet in the inner back wall into the drain pan situated above the compressor where it evaporates. If you see water building up in the rear of the unit, check that the drain trough is not clogged. Use a pipe cleaner or a piece of flexible wire. During extremely hot and humid weather, some ice may build up. If necessary, remove contents of the beer dispenser, turn the thermostat to **0** and allow defrosting. A hair dryer may facilitate the process.

Installing the Cleaning Kit

Read and understand the following instructions before installing the cleaning kit.

1. Mix one gallon of warm water and one ounce (one tablespoon) of cleaner in a bucket.
   Note: Do not use lye, soap or hot water.
2. Remove the cleaner cap. Fill the jar and replace the cap. Leave the remaining solution in the bucket.
3. Turn off either the air cock on the regulator or the valve on the CO_2 tank.
4. Disconnect the tap from the barrel. Then disconnect the beer line from the tap by turning the nut counter-clockwise. Place the tap and end of the hose in the bucket.
5. Remove the faucet from the tower with the wrench and attach the fitting on the cleaning bottle in its place.
   Note: Make sure there is a washer in the back of the fitting.
6. Hold the cleaning jar upside down until the solution runs through the system into the bucket.
7. Fill the jar with cold clean water and repeat the process until the water runs clean.
8. Rinse the tap in the bucket with cold water.
9. Remove the fitting from the tower and reinstall the faucet. Make sure the washer is in the back of the faucet.
10. Re-attach the beer hose to the tap and attach the tap to the barrel.
    Note: Beer lines should be flushed after each keg is emptied.

Cleaning the Appliance

Disconnect the power supply before cleaning the appliance.

Do not use coarse or abrasive cleaning agents as you can damage the surface of the appliance.

Periodic cleaning of the beer dispenser is necessary. A complete cleaning kit is provided for your convenience.

Every now and then, wipe the walls and bottom of the beer dispenser. Use a soft nonmetallic brush or vacuum cleaner.

To clean the cabinet inside and out, mix 2 tablespoons of baking soda with 1 quart warm water, or use a mild soap.

Do not put drip tray in the dishwasher (it is not dishwasher safe).

Vacuum the tubing on the back of the unit twice a year.

To provide protective care of a painted finish:

Regular applications of wax or polish provide vital protection against rust. Waxing cleans the surface and seals out moisture and other contaminants.

Use a wax polish that is suitable for appliances.

Apply the wax or polish when the beer dispenser is new and then at least twice a year.

Door Gasket Cleaning:

Clean the door gasket with a damp cloth every three months. The gasket must be kept clean and pliable to ensure a proper seal.

Petroleum jelly applied lightly to the hinge side of the gasket will keep the gasket pliable and ensure a good seal.

Cleaning behind the Beer Dispenser:

We recommend that you clean the rear of the beer dispenser at least twice a year.
Note: Some operating environments may require more frequent cleaning.

Use a vacuum or brush to clean the coils.

Stainless steel doors (on some models) can be cleaned with a commercially available stainless steel cleaner.

Do not use appliance wax or polish on stainless steel.

Do not wipe the door with a soiled dish cloth or wet towel. These may leave a residue.

Use stainless steel cleaner only on stainless steel surfaces.

Dry with a soft cloth.

NOISE

Modern appliances rely on energy-efficient high speed compressors. Cooling is accomplished through a system where the compressor cycles on and off pressurizing the refrigerant. This system will produce certain noises which you may not be used to. How noisy the appliance is depends on where it is placed, how it's used and how old the appliance is.

During the operation of the compressor, a liquid noise is heard and when the compressor is not operating, a refrigerant flow is heard. This is normal and has no influence whatsoever on the lifetime of the appliance.

When the new appliance is started, the operation of the compressor and the refrigerant flow may be noticeable. This does not mean something is wrong with the appliance. The noise will reduce gradually over time and will not affect the lifetime of the appliance.

Many complaints of excessive noise are traced to improper placement or leveling of the beer dispenser. This noise is often a consequence of poor installation. To avoid this noise, make sure the appliance is placed and leveled firmly on a solid base. Make sure the appliance is not touching the wall or kitchen units standing next to it in a way that vibrations can occur. And always make sure you check the accessories in the interior of the appliance; they should be placed correctly in their positions. Check the bottles, cans and other vessels that might touch each other and rattle.

Summit Outdoor beer dispensers contain a rear fan which runs only when the compressor is on, and some models have an internal air circulation fan which runs continuously. A small fan hum (similar to that of a computer fan) is normal.

TROUBLESHOOTING

Problem	Cause	Correction
Beer is cloudy: The beer in the glass appears hazy and not clear.	Excessively low temperatures may cause hazy or cloudy beer, particularly when the beer lies in the cold coil for long periods of time.	Drain a few ounces before drinking.
		Raise the temperature setting of the unit.
	Glasses may not have been cleaned properly.	Do not wash beer glasses together with glasses that have contained milk or any other fatty substance. An excessive amount of germicide build-up may also leave a fatty film, which will cause beer to go flat.
		It is preferable to steam and sterilize glasses where health laws permit.
		Wash glasses thoroughly with a good detergent to remove all fatty substances (i.e., lipstick)
		Do not use soap.
		Do not wipe the glasses dry. Permit glasses to air-dry by placing them on a wire rack or on a corrugated metal sheet.
		Rinse the glasses in fresh cold water just before serving beer. It is best to serve beer in a wet glass.
	Improper drawing of beer into glass	Open the faucet quickly and completely; proper foam should be a tight creamy head. The collar on the average glass should be ¾" to 1" high. Beer drawn without a head has the appearance of being flat.
	Not enough pressure	Increase the pressure if beer runs too slowly. The correct flow should fill a 10-oz glass in 4 seconds (approx. 8 oz of liquid). Check the pressure source to determine whether there are obstructions in the air line. Replace a sluggish air source or the CO_2 regulator and gauge. The tank pressure must always be higher than the pressure used on the keg. Always apply pressure to the keg before drawing beer.

Beer has off taste: Often bitter and bite-y; sometimes completely lacking flavor and zest. It may also have an oily or foul odor which may carry an unpleasant taste.	Improper cleaning of the tap	Brush and clean the tap properly. It should be scoured using a detergent, then rinsed clean.
	Contaminated air line	Beer tube should be examined. If contaminated, it should be replaced.
Condensation is forming on faucet.	It is normal to see conden-sation forming on the faucet. It is caused by a difference in temperature between the cold beer and the surfaces of the faucet when beer is flowing through the line. Beer that is left in the faucet is not cooled by the beer dispenser.	After a period of non-use, a few ounces should be drained before drinking.

NOTES

LIMITED WARRANTY

ONE-YEAR LIMITED WARRANTY

Within the 48 contiguous United States, for one year from the date of purchase, when this appliance is operated and maintained according to instructions attached to or furnished with the product, warrantor will pay for factory-specified parts and repair labor to correct defects in materials or workmanship. Service must be provided by a designated service company. Outside the 48 states, all parts are warranted for one year from manufacturing defects. Plastic parts, shelves and cabinets are warranted to be manufactured to commercially acceptable standards, and are not covered from damage during handling or breakage.

5-YEAR COMPRESSOR WARRANTY

1. The compressor is covered for 5 years.
2. Replacement does not include labor.

ITEMS WARRANTOR WILL NOT PAY FOR:

1. Service calls to correct the installation of your appliance, to instruct you how to use your appliance, to replace or repair fuses or to correct wiring or plumbing.
2. Service calls to repair or replace appliance light bulbs or broken shelves. Consumable parts (such as filters) are excluded from warranty coverage.
3. Damage resulting from accident, alteration, misuse, abuse, fire, flood, acts of God, improper installation, installation not in accordance with electrical or plumbing codes, or use of products not approved by warrantor.
4. Replacement parts or repair labor costs for units operated outside the United States.
5. Repairs to parts or systems resulting from unauthorized modifications made to the appliance.
6. Expenses for travel and transportation for product service in remote locations.
7. The removal and reinstallation of your appliance if it is installed in an inaccessible location or is not installed in accordance with published installation instructions.

DISCLAIMER OF IMPLIED WARRANTIES; LIMITATION OF REMEDIES

CUSTOMER'S SOLE AND EXCLUSIVE REMEDY UNDER THIS LIMITED WARRANTY SHALL BE PRODUCT REPAIR AS PROVIDED HEREIN. IMPLIED WARRANTIES, INCLUDING WARRANTIES OF MERCHANTABILITY OR FITNESS FOR A PARTICULAR PURPOSE, ARE LIMITED TO ONE YEAR. WARRANTOR SHALL NOT BE LIABLE FOR INCIDENTAL OR CONSEQUENTIAL DAMAGES. SOME STATES DO NOT ALLOW THE EXCLUSION OR LIMITATION OF INCIDENTAL OR CONSEQUENTIAL DAMAGES, OR LIMITATIONS ON THE DURATION OF IMPLIED WARRANTIES OF MERCHANTABILITY OR FITNESS, SO THESE EXCLUSIONS OR LIMITATIONS MAY NOT APPLY TO YOU. THIS WARRANTY GIVES YOU SPECIFIC LEGAL RIGHTS AND YOU MAY ALSO HAVE OTHER RIGHTS, WHICH VARY FROM STATE TO STATE.

WARNING! This product may contain chemicals known to the state of California to cause cancer or birth defects or other reproductive harm. For more information, visit: www.summitappliance.com/prop65

Chemicals known by the manufacturer to be present in this product in concentrations higher than threshold limits: NONE.

FELIX STORCH, INC.
770 Garrison Avenue
Bronx, NY 10474
Phone: (718) 893-3900
Fax: (718) 842-3093
www.summitappliance.com

SUMMIT

For parts and accessory ordering, troubleshooting and helpful hints, visit:
www.summitapplianceparts.com