Distributed By:

Felix Storch, Inc.
770 Garrison Avenue
Bronx, NY 10474
www.summitappliance.com

COMMERCIAL STORAGE FREEZERS

Models	**SCF694**	**SCF695S**
	SCF1094	**SCF1095S**
	SCF1494	**SCF1495S**
	SCF1694	**SCF1695S**
	SCF1894	**SCF1895S**

Instruction Manual

BEFORE USE, PLEASE READ AND FOLLOW ALL SAFETY RULES AND OPERATING INSTRUCTIONS.

Write Model Number and Serial Number (on rating label) here:

Model No. _____

Serial No. _____

TABLE OF CONTENTS

Appliance Safety **3**

Important Safeguards **3-5**

Location of Parts, Temperature Control **6**

Technical Information **7**

Installation Instructions **8-10**

Moving and Installing Your Appliance 8

Attaching the Casters 9

Electrical Connection 9-10

Extension Cord 10

Operating Your Appliance **10-12**

Turning On the Freezer 10-11

Storing Items in the Unit 11

Defrosting the Unit 11

Lock and Keys 12

Normal Phenomena 12

Care and Maintenance **12-13**

Cleaning Your Appliance 12-13

Power Failure 13

Vacation Time 13

Moving Your Appliance 13

Power Cord 13

Energy Saving Tips 13

Troubleshooting **14-15**

Limited Warranty **16**

APPLIANCE SAFETY

Your safety and the safety of others are very important.

We have provided many important safety messages in this manual and on your appliance. Always read and obey all safety messages.

This is the Safety Alert Symbol. The symbol alerts you to potential hazards that can kill or injure you and others. All safety messages will follow the Safety Alert Symbol and either the words "DANGER" or "WARNING".

DANGER

Danger means that failure to heed this safety statement may result in severe personal injury or death.

WARNING

Warning means that failure to heed this safety statement may result in extensive product damage, serious personal injury, or death.

All safety messages will alert you about the potential hazard, tell you how to reduce the chance of injury, and let you know what can happen if the instructions are not followed.

IMPORTANT SAFEGUARDS

Before the appliance is used, it must be properly positioned and installed as described in this manual, so read the manual carefully. To reduce the risk of fire, electrical shock or injury when using the appliance, follow basic precautions, including the following:

DANGER

- Plug into a grounded 3-prong outlet, do not remove grounding prong, do not use an adapter, and do not use an extension cord.

- Replace all panels before operating.
- It is recommended that a separate circuit serving only your appliance be provided. Use receptacles that cannot be turned off by a switch or pull chain.
- Never clean appliance parts with flammable fluids. These fumes can create a fire hazard or explosion. And do not store or use gasoline or other flammable vapors and liquids in the vicinity of this or any other appliance. The fumes can create a fire hazard or explosion.
- Before proceeding with cleaning and maintenance operations, make sure the power line of the unit is disconnected.
- Do not connect or disconnect the electric plug when your hands are wet.
- Unplug the appliance or disconnect power before cleaning or servicing. Failure to do so can result in electrical shock or death.
- Do not attempt to repair or replace any part of your appliance unless it is specifically recommended in this manual. All other servicing should be referred to a qualified technician.

⚠ WARNING

FOLLOW WARNING CALLOUTS BELOW ONLY WHEN APPLICABLE TO YOUR MODEL

- Use two or more people to move and install the appliance. Failure to do so can result in back or other injury.
- To ensure proper ventilation for your appliance, the front of the unit must be completely unobstructed. Choose a well-ventilated area with temperatures above 60°F (16°C) and below 90°F (32°C). This unit must be installed in an area protected from the elements, such as wind, rain, water spray or drips.
- The appliance should not be located next to ovens, grills or other sources of high heat.
- The appliance must be installed with all electrical, water and drain connections in accordance with state and local codes. A standard electrical supply (120 V AC only, 60 Hz), properly grounded in accordance with the National Electrical Code and local codes and ordinances, is required.
- Do not kink or pinch the power supply cord of the appliance.
- The size of the fuse (or circuit breaker) should be 15 amperes.
- It is important that the appliance be level in order to work properly. You may need to make several adjustments to level it.
- All installations must be in accordance with local plumbing code requirements.

- Make certain that the pipes are not pinched, kinked or damaged during installation.
- Check for leaks after connection.
- To avoid damage, never place hot or heavy items on top of the freezer.
- Never allow children to operate, play with or crawl inside the appliance.
- Do not use solvent-based cleaning agents or abrasives on the interior. These cleaners may damage or discolor the interior.
- Use this appliance only for its intended purpose as described in this *Instruction Manual*.
- Keep fingers out of the “pinch point” areas. Clearances between the doors and between the doors and cabinet are necessarily small. Be careful closing doors when children are in the area.

⚠ DANGER ⚠ ***Risk of child entrapment!***

Child entrapment and suffocation are not problems of the past. Junked or abandoned appliances are still dangerous, even if they will “just sit for a few days”.

Before discarding your old refrigerator:

- *Take off the doors.*
- *Leave the shelves in place so that children may not easily climb inside.*

- SAVE THESE INSTRUCTIONS -

LOCATION OF PARTS

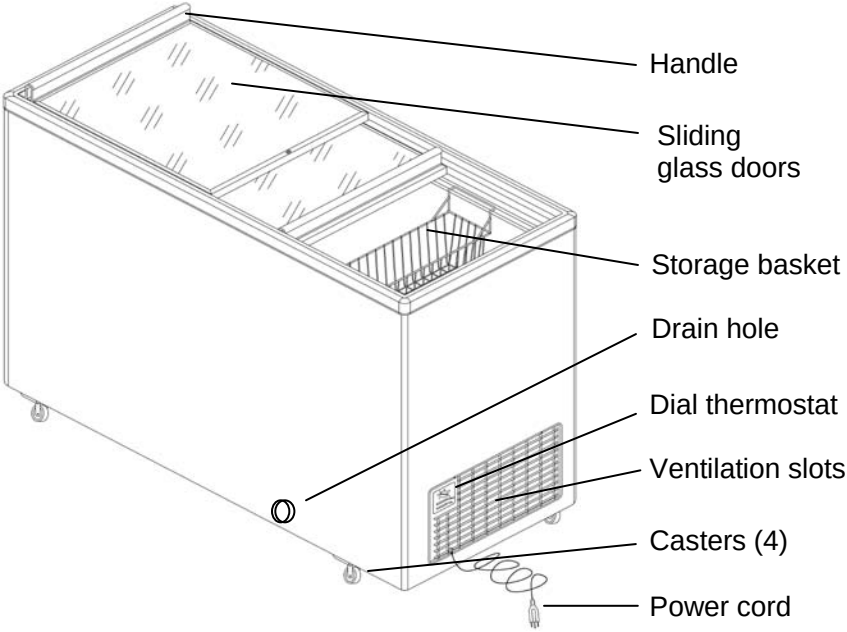

Temperature Control

The temperature inside the freezer is controlled by a dial thermostat with settings ranging from **0** (Off) to **7** (coldest). A moderate setting (from **3** to **5**) is recommended for most purposes. **DO NOT USE SETTING 7**, which could cause the compressor to run continuously.

Setting the thermostat at **0** stops the cooling process but it does not cut off electrical power to the freezer. To do this it is necessary to unplug the appliance.

TECHNICAL INFORMATION

Model	SCF694/695S	SCF1094/1095S
Installation	Free-standing	Free-standing
Capacity	7.4 ft^3/5.8ft3	10.7 ft^3/9.4ft^3
Temp. Range	-5°F to +5°F	-5°F to +5°F
Electrical Input	115/120V AC 60Hz	115/120V AC 60Hz
Refrigerant	R134a	R134a
Unit Weight	154lbs	187 lbs
Unit Dimensions	28.5"W x 25.6"/26.7”D x 36.1"H	41.5"W x 25.6"/26.7”D x 36.1"H

SCF1494/1495S	SCF1694/1695S	SCF1894/1895S
Free-standing	Free-standing	Free-standing
13.8 ft^3/12.2 ft^3	15.5 ft^3	20 ft^3/18.5ft^3
-5°F to +5°F	-5°F to +5°F	-5°F to +5°F
115/120V AC 60Hz	115/120V AC 60Hz	115/120V AC 60Hz
R134a	R134a	R134a
215 lbs	246 lbs	266 lbs
51.3"W x 25.6"/26.7”D x 36.1"H	59.2"W x 25.6"/26.7”D x 36.1"H	67.1"W x 25.6"/26.7”D x 36.1"H

NOTE: Specifications are subject to change without notice.

INSTALLATION INSTRUCTIONS

- *This appliance is meant for free-standing installation; it should not be built-in.*
- *Do not store or install the appliance outdoors.*
- *This appliance is designed for the storage of frozen items. Do not use it to store medicine or other medical products.*

Moving and Installing Your Appliance

- When transporting, keep the unit vertical as much as possible. The angle between the vertical and the side of the unit should never exceed 45° since this could affect the compressor and result in abnormal operation. Never turn the unit upside down.
- After unpacking the unit, remove the packing materials and attach the casters (see following section). Place the unit on a level and sturdy floor near a power socket.
- Leave at least 4" of space between the back and sides of the unit and the surrounding walls for ventilation.
- Keep the unit away from heat sources and avoid direct sunlight.
- Never place the unit in a location with high humidity or where water can reach it.
- It is recommended that you install the appliance in a place where the ambient temperature is between 72º and 78ºF (23º-26ºC). If the ambient temperature is above or below the recommended temperatures, the performance of the unit may be affected. For example, placing your unit in extreme cold or hot conditions may cause interior temperatures to fluctuate.

Attaching the Casters

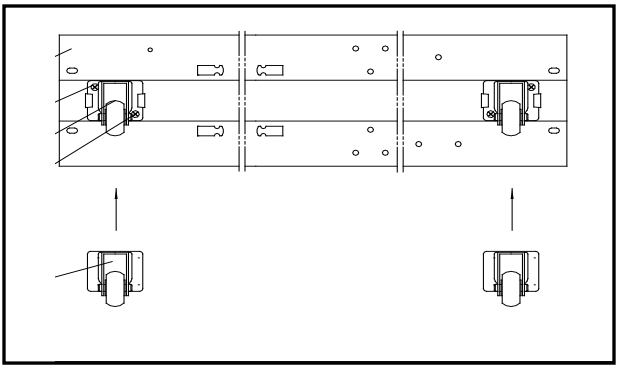

You will find a carton of four (4) casters packed inside the unit. The casters can be slid into position in the four slotted areas on the bottom of the freezer.

Electrical Connection

⚠ WARNING

Improper use of the grounded plug can result in the risk of electrical shock. If the power cord is damaged, have it replaced by a qualified electrician or an authorized service center.

Never ground the unit through a gas, heating, or tap water pipe or the grounded wire of a single-phase power supply.

This appliance should be properly grounded for your safety. The power cord of this appliance is equipped with a three-prong plug that mates with standard three-prong wall outlets to minimize the possibility of electrical shock.

Do not under any circumstances cut or remove the third (ground) prong from the power cord supplied. For personal safety, this appliance must be properly grounded.

This appliance requires a standard 115/120 Volt AC ~ 60Hz three-prong grounded electrical outlet. Have the wall outlet and circuit checked by a qualified electrician to make sure the outlet is properly grounded. When a standard 2-prong wall outlet is encountered, it is your responsibility and

obligation to have it replaced with a properly grounded 3-prong wall outlet.

To prevent accidental injury, the cord should be secured behind the appliance and not left exposed or dangling.

The appliance should always be plugged into an exclusive, properly grounded wall outlet which has a voltage rating that matches the rating label on the appliance. This provides the best performance and also prevents overloading wiring circuits that could cause a fire hazard from overheating. Never unplug the appliance by pulling on the power cord. Always grip the plug firmly and pull straight out from the receptacle. Repair or replace immediately all power cords that have become frayed or otherwise damaged. Do not use a cord that shows cracks or abrasion damage along its length or at either end. When moving the appliance, be careful not to damage the power cord.

Extension Cord

Because of potential safety hazards under certain conditions, it is strongly recommended that you do not use an extension cord with this appliance. However, if you must use an extension cord it is absolutely necessary that it be a UL/CUL-Listed, 3-wire grounding type appliance extension cord having a grounding type plug and outlet and that the electrical rating of the cord be 115/120 volts and at least 10 amperes.

OPERATING YOUR APPLIANCE

Turning On the Freezer

Connect the unit to a power supply and turn the Temperature Control to the setting, **4**. Be sure the doors are closed. Allow the unit to run for about 6 hours before storing anything inside. The temperature should be about -1°F. Turn the Temperature Control to the normal operating setting (**3** to **5**). It may be necessary to adjust the setting depending on such factors as amount of items loaded and ambient temperature.

Note: Avoid using setting **7**, as this could cause the compressor to overwork.

CAUTION

- If power is disconnected, do not try to restart the freezer within 5 minutes of the power disconnect.
- Do not make holes through the walls of the unit in order to mount other items.
- Avoid splashing water on the unit.
- Do not store medical or pharmaceutical products in the unit.
- Keep the keys of the door lock out of the reach of children.

Storing Items in the Unit

- This appliance is intended to store pre-frozen items, and is not suitable for freezing products.
- Try to avoid putting a large number of items into the unit at one time. Leave space around the stored items to allow an unimpeded flow of cold air.
- Do not overload the freezer. Fill it only to the Load Line marked on the inner cabinet.
- When the freezer is loaded with products, the temperature inside the cabinet should be about 0°F (-17.7°C). Adding items warmer than 5°F (-15°C) may cause damage to products already in the freezer.
- Never store any flammable, explosive or corrosive materials in or near the freezer.
- Beer and other beverages, fresh flowers, medicine and injectables should not be placed in the freezer.

Defrosting the Unit

When the frost on the cabinet wall reaches a thickness of ¼ inch, defrost the freezer to optimize the freezing operation.

Turn Temperature Control to the lowest setting (**0** - Off) for 5-6 hours before defrosting.

Disconnect the power and remove the stored items from the freezer. Use a plastic or wooden scraper to remove the frost from the interior of the unit. Do not use sharp or metallic tools for this purpose. Open the drain hole and place a pan below it.

After defrosting, wipe the walls and floor of the unit dry with a clean cloth, then close the drain hole. Follow the instructions for *Turning On the Freezer* on page 10.

Lock and Keys

Your unit is provided with a lock and set of keys.

The keys are located inside the plastic bag that contains the *Instruction Manual*. Insert the key into the lock and turn it clockwise to unlock the door. To lock the doors, do the reverse operation, making sure the metal pin is engaged completely. Remove the key and put it in a secure place for safekeeping, out of the reach of children.

Normal Phenomena

You may notice the following phenomena happening with your appliance. They are normal and should not be a cause for alarm.

- If you hear a sound like water flowing, this is refrigerant flowing through the pipes.
- When freezer is running, the compressor and condenser feel warm, or even hot.
- Under conditions of high humidity, moisture forms on the outer cabinet or doors. This can be wiped away with a clean, soft, dry cloth.

CARE AND MAINTENANCE

Cleaning Your Appliance

- Turn the thermostat to **0**, unplug the appliance, and remove all items inside.
- Wash the inside surfaces with a solution of warm water and baking soda (about 2 tablespoons of baking soda to a quart of water).
- Wash the baskets with a mild detergent solution.
- Wash the outside cabinet with warm water and mild liquid detergent. Rinse well and wipe dry with a clean soft cloth. Wring excess water out of the sponge or cloth when cleaning the area where the controls are located, or any electrical parts.
- Use warm water to clean oil or fruit juice stains on the door gasket to retain its elasticity. Putting a little talcum powder on the surface of the gasket will prolong its service life.
- To avoid damaging the surfaces of the unit, do not use steel wool, a steel brush or any abrasive material when cleaning.

⚠ WARNING

- *Failure to unplug the appliance during cleaning could result in electrical shock or other personal injury.*
- *Young children and infirm persons should not operate the appliance without supervision.*
- *Young children should be warned not to play with the appliance.*

Power Failure

Most power failures are corrected within a few hours and should not affect the temperature of your freezer if you minimize the number of times the doors are opened. If the power is going to be off for a longer period of time, you need to take the proper steps to protect the contents.

Vacation Time

- **Short vacations:** Leave freezer operating during vacations of less than three weeks.
- **Long vacations:** If the freezer will not be used for several months, remove all items and turn off the appliance. Clean and dry the interior thoroughly. To prevent odor and mold growth, leave the doors open slightly.

Moving Your Appliance

1. Remove all food items from the freezer.
2. Securely tape down the baskets and any other loose items inside the freezer.
3. Tape the doors shut.
4. Keep the freezer in its upright position during transportation. Also, protect the outside with a blanket or similar covering.

Power Cord

If the power cord is damaged, it must be replaced by the manufacturer, its service agent or a similarly qualified person in order to avoid an electrical hazard.

Energy Saving Tips

- The appliance should be located in the coolest area of the room, away from heat-producing appliances and out of direct sunlight.
- Ensure that the unit is adequately ventilated. Never cover air vents.
- Do not keep the doors open any longer than necessary.

TROUBLESHOOTING

You can solve many common problems easily, saving you the cost of a possible service call. Try the suggestions below to see if you can solve the problem before calling the servicer.

PROBLEM	POSSIBLE CAUSE	SOLUTION
The unit does not operate.	Temperature control is set to **OFF**	Adjust temperature control.
	Bad plug connection	Reconnect the plug to power source.
	Tripped circuit breaker or blown fuse	Reset circuit breaker or replace fuse.
The internal temperature is too low.	Temperature control is set too high.	Adjust temperature control.
	Thermostat does not work.	Call our service department for repair suggestions.
The internal temperature is too high. Compressor operates continuously.	Temperature control is set too low.	Adjust temperature control.
	Poor heat dissipation and ventilation of condenser	Allow more space at back of freezer. Be sure ventilation slots are clear.
	Too much warm food was put in at one time.	Remove contents. This unit is not designed to freeze warm food.
	Too much food stored at one time.	Reduce the quantity below the Load Line.
	Doors were opened frequently or held open too long.	Decrease frequency and length of time of door opening.
	Thick frost	Defrost.
	Freezer is too near a source of heat.	Relocate the unit.
Operation is too noisy.	The appliance is not level.	Level or relocate the appliance.
	Pipes near the compressor are touching.	Carefully separate the touching pipes.
	The freezer is too close to a wall or cabinet.	Move the unit away from the adjacent surface.

⚠ WARNING

If the freezer develops problems that cannot be solved by referring to the chart above, do not try to dismantle the unit yourself. This could void your warranty. Instead, refer to an authorized service center or call SUMMIT Customer Service at **1-800-932-4267**.

LIMITED WARRANTY

ONE-YEAR LIMITED WARRANTY

Within the 48 contiguous United States, for one year from the date of purchase, when this appliance is operated and maintained according to instructions attached to or furnished with the product, warrantor will pay for factory-specified parts and repair labor to correct defects in materials or workmanship. Service must be provided by a designated service company. Outside the 48 states, all parts are warranted for one year from manufacturing defects. Plastic parts, shelves and cabinets are warranted to be manufactured to commercially acceptable standards, and are not covered from damage during handling or breakage.

5-YEAR COMPRESSOR WARRANTY

1. The compressor is covered for 5 years.
2. Replacement does not include labor.

ITEMS WARRANTOR WILL NOT PAY FOR:

1. Service calls to correct the installation of your appliance, to instruct you how to use your appliance, to replace or repair fuses or to correct wiring or plumbing.
2. Service calls to repair or replace appliance light bulbs or broken shelves. Consumable parts (such as filters) are excluded from warranty coverage.
3. Damage resulting from accident, alteration, misuse, abuse, fire, flood, acts of God, improper installation, installation not in accordance with electrical or plumbing codes, or use of products not approved by warrantor.
4. Replacement parts or repair labor costs for units operated outside the United States.
5. Repairs to parts or systems resulting from unauthorized modifications made to the appliance.
6. Expenses for travel and transportation for product service in remote locations.
7. The removal and reinstallation of your appliance if it is installed in an inaccessible location or is not installed in accordance with published installation instructions.

DISCLAIMER OF IMPLIED WARRANTIES; LIMITATION OF REMEDIES

CUSTOMER'S SOLE AND EXCLUSIVE REMEDY UNDER THIS LIMITED WARRANTY SHALL BE PRODUCT REPAIR AS PROVIDED HEREIN. IMPLIED WARRANTIES, INCLUDING WARRANTIES OF MERCHANTABILITY OR FITNESS FOR A PARTICULAR PURPOSE, ARE LIMITED TO ONE YEAR. WARRANTOR SHALL NOT BE LIABLE FOR INCIDENTAL OR CONSEQUENTIAL DAMAGES. SOME STATES DO NOT ALLOW THE EXCLUSION OR LIMITATION OF INCIDENTAL OR CONSEQUENTIAL DAMAGES, OR LIMITATIONS ON THE DURATION OF IMPLIED WARRANTIES OF MERCHANTABILITY OR FITNESS, SO THESE EXCLUSIONS OR LIMITATIONS MAY NOT APPLY TO YOU. THIS WARRANTY GIVES YOU SPECIFIC LEGAL RIGHTS AND YOU MAY ALSO HAVE OTHER RIGHTS, WHICH VARY FROM STATE TO STATE.

WARNING! This product may contain chemicals known to the state of California to cause cancer or birth defects or other reproductive harm. For more information, visit:

www.summitappliance.com/prop65

Chemicals known by the manufacturer to be present in this product in concentrations higher than threshold limits: NONE.

FELIX STORCH, INC.
770 Garrison Avenue
Bronx, NY 10474
Phone: (718) 893-3900
Fax: (718) 842-3093
www.summitappliance.com

SUMMIT COMMERCIAL

For parts and accessory ordering, trouble-shooting and helpful hints, visit:
www.summitappliance.com/support