BEVERAGE MERCHANDISER
OWNER'S MANUAL

Model No.: SCR312L

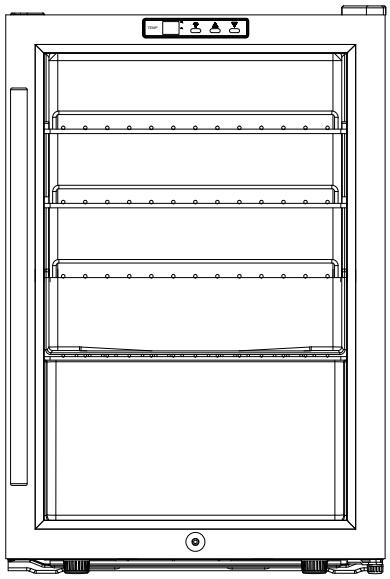

BEFORE USE, PLEASE READ AND FOLLOW ALL SAFETY RULES AND OPERATING INSTRUCTIONS.

Write Serial No. (on back of unit) here:

_____

Felix Storch, Inc.
770 Garrison Avenue
Bronx, NY 10474
www.summitappliance.com

TABLE OF CONTENTS

Appliance Safety	**3**
Important Safeguards	**3 - 4**
Location of Parts	**5**
Installation Instructions	**5 - 7**
Before Using Your Appliance	5
Installation of Your Appliance	5 - 6
Electrical Connection	6
Extension Cord	6
Installing the Stainless Steel Handle	7
Operating Your Appliance	**7 - 8**
Control Panel	7 - 8
Door Lock	8
Defrosting	8
Shelves	8
Care and Maintenance	**9**
Cleaning Your Appliance	
Power Failure	
Vacation Time	
Moving Your Appliance	
Energy Saving Tips	
Troubleshooting	**10**
Limited Warranty	**12**

APPLIANCE SAFETY

Your safety and the safety of others are very important.

We have provided many important safety messages in this manual and on your appliance. Always read and obey all safety messages.

This is the Safety Alert Symbol. The symbol alerts you to potential hazards that can kill or injure you and others. All safety messages will follow the Safety Alert Symbol and either the words "DANGER" or "WARNING".

DANGER

Danger means that failure to heed this safety statement may result in severe personal injury or death.

WARNING

Warning means that failure to heed this safety statement may result in extensive product damage, serious personal injury, or death.

All safety messages will alert you about the potential hazard, tell you how to reduce the chance of injury, and let you know what can happen if the instructions are not followed.

IMPORTANT SAFEGUARDS

Before the appliance is used, it must be properly positioned and installed as described in this manual, so read the manual carefully. To reduce the risk of fire, electrical shock or injury when using the appliance, follow basic precautions, including the following:

DANGER

- Plug into a grounded 3-prong outlet, do not remove grounding prong, do not use an adapter, and do not use an extension cord.
- Replace all panels before operating.
- It is recommended that a separate circuit serving only your appliance be provided. Use receptacles that cannot be turned off by a switch or pull chain.
- Never clean appliance parts with flammable fluids. These fumes can create a fire hazard or explosion. And do not store or use gasoline or other flammable vapors and liquids in the vicinity of this or any other appliance. The fumes can create a fire hazard or explosion.
- Before proceeding with cleaning and maintenance operations, make sure the power line of the unit is disconnected.
- Do not connect or disconnect the electric plug when your hands are wet.
- Unplug the appliance or disconnect power before cleaning or servicing. Failure to do so can result in electrical shock or death.

- Do not attempt to repair or replace any part of your appliance unless it is specifically recommended in this manual. All other servicing should be referred to a qualified technician.

⚠ WARNING

FOLLOW WARNING CALLOUTS BELOW ONLY WHEN APPLICABLE TO YOUR MODEL

- Use two or more people to move and install appliance. Failure to do so can result in back or other injury.
- To ensure proper ventilation for your appliance, the front of the unit must be completely unobstructed. Choose a well-ventilated area with temperatures above 60°F (16°C) and below 90°F (32°C). This unit must be installed in an area protected from the elements, such as wind, rain, water spray or drips.
- The appliance should not be located next to ovens, grills or other sources of high heat.
- The appliance must be installed with all electrical, water and drain connections in accordance with state and local codes. A standard electrical supply (115 V AC only, 60 Hz), properly grounded in accordance with the National Electrical Code and local codes and ordinances, is required.
- Do not kink or pinch the power supply cord of the appliance.
- The size of the fuse (or circuit breaker) should be 15 amperes.
- It is important that the appliance be leveled in order to work properly. You may need to make several adjustments to level it.
- All installations must be in accordance with local plumbing code requirements.
- Make certain that the pipes are not pinched, kinked or damaged during installation.
- Check for leaks after connection.
- Never allow children to operate, play with or crawl inside the appliance.
- Do not use solvent-based cleaning agents or abrasives on the interior. These cleaners may damage or discolor the interior.
- Use this appliance only for its intended purpose as described in this *Owner's Manual*.
- Keep fingers out of the "pinch point" areas. Clearances between the doors and between the doors and cabinet are necessarily small. Be careful closing doors when children are in the area.

⚠ DANGER ⚠ ***Risk of child entrapment!***

Child entrapment and suffocation are not problems of the past. Junked or abandoned appliances are still dangerous, even if they will "just sit in the garage a few days".

Before discarding your old refrigerator:

- *Take off the doors*
- *Leave the shelves in place so that children may not easily climb inside.*

- SAVE THESE INSTRUCTIONS -

LOCATION OF PARTS

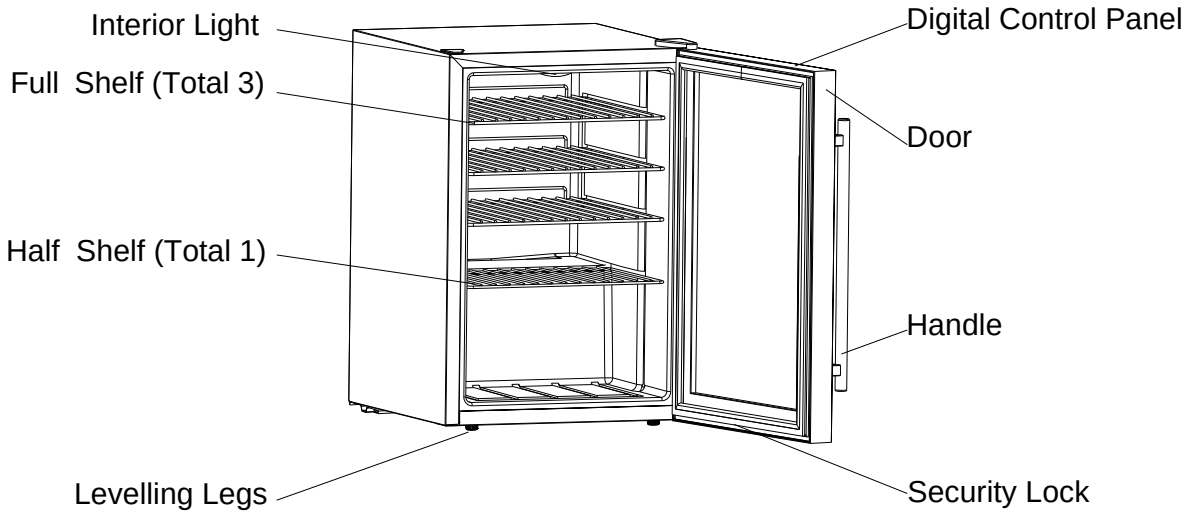

INSTALLATION INSTRUCTIONS

BEFORE USING YOUR APPLIANCE

- Remove the exterior and interior packing.
- Before connecting the appliance to the power source, let it stand upright for approximately 2 hours. This will reduce the possibility of a malfunction in the cooling system from handling during transportation.
- Clean the interior surface with lukewarm water using a soft cloth.
- Install the handle on the door. (See page 7.)

INSTALLATION OF YOUR APPLIANCE

- The appliance is designed for free-standing installation only.
- **WARNING**: Do not store or install the appliance outdoors.
- **CAUTION:** This appliance is designed for storing and cooling beverages and drinks. Do not store perishable food, medicine or other medical products.
- Place your Beverage Merchandiser on a floor that is strong enough to support it when it is fully loaded. To level the unit, adjust the front leveling legs.
- For free-standing installation, leave 5 inches (127mm) of space around the back and sides of the unit to allow proper air circulation to cool the compressor and condenser.
- NOTE: It is recommended that you do not install the appliance near an oven, radiator or other heating source. Direct sunlight may affect the acrylic coating and heat sources may increase electrical consumption. Don’t install in a location where the temperature will fall below 60°F (16°C). For best performance, do not install the appliance behind a cabinet door or block the base grille.
- Avoid locating the unit in moist areas.
- Plug the Beverage Merchandiser into an exclusive, properly grounded wall outlet. Do not under any

ELECTRICAL CONNECTION

WARNING

Improper use of the grounded plug can result in the risk of electrical shock. If the power cord is damaged, have it replaced by a qualified electrician or an authorized service center.

This appliance should be properly grounded for your safety. The power cord of this appliance is equipped with a three-prong plug which mates with standard three-prong wall outlets to minimize the possibility of electrical shock.

Do not under any circumstances cut or remove the third (ground) prong from the power cord supplied. For personal safety, this appliance must be properly grounded.

This appliance requires a standard 115/120 Volt AC ~ 60Hz three-prong grounded electrical outlet. Have the wall outlet and circuit checked by a qualified electrician to make sure the outlet is properly grounded. When a standard 2-prong wall outlet is encountered, it is your responsibility and obligation to have it replaced with a properly grounded 3-prong wall outlet.

To prevent accidental injury, the cord should be secured behind the appliance and not left exposed or dangling.

The appliance should always be plugged into its own individual electrical outlet which has a voltage rating that matches the rating label on the appliance. This provides the best performance and also prevents overloading house wiring circuits that could cause a fire hazard from overheating. Never unplug the appliance by pulling on the power cord. Always grip the plug firmly and pull straight out from the receptacle. Repair or replace immediately all power cords that have become frayed or otherwise damaged. Do not use a cord that shows cracks or abrasion damage along its length or at either end. When moving the appliance, be careful not to damage the power cord.

EXTENSION CORD

Because of potential safety hazards under certain conditions, it is strongly recommended that you do not use an extension cord with this appliance. However, if you must use an extension cord it is absolutely necessary that it be a UL/CUL-Listed, 3-wire grounding type appliance extension cord having a grounding type plug and outlet and that the electrical rating of the cord be 115 volts and at least 10 amperes.

INSTALLING THE STAINLESS STEEL HANDLE

This beverage merchandiser includes a stainless steel handle that is not required to operate the unit. To install the handle, follow the instructions below:

1. Remove the door gasket on the side you wish to install the handle - you can see two designated holes for handle installation. The gasket is easily displaced by hand, no tools are necessary.
2. Install the handle tightly as shown with two screws, lock washers and flat washers provided. (DO NOT over tighten as this will cause damage to the handle and stainless steel door frame).
3. Replace the door gasket to its original position.

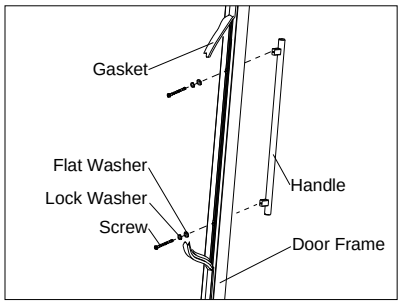

OPERATING YOUR APPLIANCE

It is recommended you install the appliance in a place where the ambient temperature is between 72º and 78ºF (23º-26ºC). If the ambient temperature is above or below the recommended temperatures, the performance of the unit may be affected. For example, placing your unit in extremely cold or hot conditions may cause interior temperatures to fluctuate. The range of 34º-43ºF (1º-6ºC) may not be reached.

CONTROL PANEL

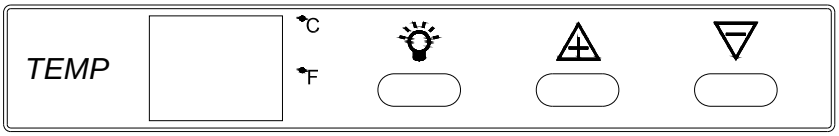

LIGHT

To control the inner light turn on/off.

UP

Used to raise (warm) the set temperature by 1°F/°C.

DOWN

Used to lower (cool) the set temperature by 1°F/°C.

ºF/ºC Selector

Choose to display temperature setting in Fahrenheit or Celsius. To change the temperature from Fahrenheit to Celsius or from Celsius to Fahrenheit, press the button for at least 5 seconds.

Setting the Temperature Control

- You can set the temperature by pressing the **UP** and **DOWN** buttons. When you press the two buttons for the first time, the LED readout will show the original temperature set previously. (The temperature preset at the factory is 38°F, or 3°C.)

- The temperature you are setting will increase by one degree each time you press the **UP** button, and will decrease by one degree each time you press the **DOWN** button.
- The range of the temperature control is from 34°F to 43°F.
- To view the set temperature at any time, press the **UP** or **DOWN** button. The set temperature will flash in the display window for 5 seconds. After 5 seconds, the temperature inside the unit will reappear in blue in the display window.

NOTE:

- If the unit is unplugged, or power is lost or turned off, you must wait 3 to 5 minutes before restarting the unit. If you attempt to restart before this time delay, the unit will not start.
- When you use the unit for the first time or restart the unit after it has been shut off for a long time, there could be a few degrees variance between the temperature you select and the one indicated on the LED readout. This is normal and is due to the length of the activation time. There should not be a problem once the unit has been running for a few hours.

DOOR LOCK

Your unit is provided with a lock and key combination.

The keys are located inside the plastic bag that contains the *Owner's Manual*. Insert the key into the lock and turn it counterclockwise to unlock the door. To lock the door, do the reverse operation, making sure the metal pin is engaged completely. Remove the key and put it in a secure place for safekeeping.

DEFROSTING

This appliance requires no manual defrosting. During the operation of the compressor, ice will build up on the evaporator plate which is at the back of inner cabinet. During the compressor's off-cycle, the ice will melt, drip down, and collect in a tray above the compressor, where the compressor's heat evaporates the water. If you notice excessive ice build-up on the evaporator, try setting the temperature slightly higher. Also, be sure that the door gasket is sealing well.

SHELVES

The unit has three full-sized and one half-sized removable, chrome-plated wire shelves. To take out a shelf, first remove its contents, then raise the back of the shelf slightly and pull the shelf out.

CARE AND MAINTENANCE

CLEANING YOUR APPLIANCE

- Turn off the power, unplug the appliance, and remove all items, including shelves.
- Wash the inside surfaces with a solution of warm water and baking soda (about 2 tablespoons of baking soda to a quart of water).
- Wash the shelves with a mild detergent solution.
- Wring excess water out of the sponge or cloth when cleaning the area where the controls are located, or any electrical parts.
- Wash the outside cabinet with warm water and mild liquid detergent. Rinse well and wipe dry with a clean soft cloth.
- Do not use steel wool or a steel brush on the stainless steel.

POWER FAILURE

Most power failures are corrected within a few hours and should not affect the temperature of your appliance if you minimize the number of times the door is opened. If the power is going to be off for a longer period of time, you need to take the proper steps to protect the contents.

VACATION TIME

- **Short vacations:** Leave the appliance operating during vacations of less than three weeks.
- **Long vacations:** If the appliance will not be used for several months, remove all items and turn off the appliance. Clean and dry the interior thoroughly. To prevent odor and mold growth, leave the door open slightly, blocking it open if necessary.

MOVING YOUR APPLIANCE

1. Remove all items.
2. Securely tape down all loose items (shelves) inside your appliance.
3. Turn the adjustable legs up to the base to avoid damage.
4. Tape the door shut.
5. Be sure the appliance stays secure in the upright position during transportation. Also, protect the outside of the appliance with a blanket or similar item.

ENERGY SAVING TIPS

- The appliance should be located in the coolest area of the room, away from heat producing appliances and out of direct sunlight.
- Ensure that the unit is adequately ventilated.
- Do not keep the door open any longer than necessary.

CAUTION: Failure to unplug the appliance during cleaning could result in electrical shock or other personal injury.

TROUBLESHOOTING

You can solve many common problems easily, saving you the cost of a possible service call. Try the suggestions below to see if you can solve the problem before calling the service technician.

Troubleshooting Guide

PROBLEM	POSSIBLE CAUSE
The unit does not operate.	Not plugged in. Tripped circuit breaker or blown fuse.
The unit is not cold enough.	Check the temperature control setting. External environment may require a higher setting. The door is opened too often. The door is not closed completely. The door gasket does not seal properly.
Turns on and off frequently.	The room temperature is warmer than normal. A large amount of contents has been added to the beverage merchandiser. The door is opened too often. The door is not closed completely. The temperature control is not set correctly. The door gasket does not seal properly.
The light does not work.	Not plugged in. Tripped circuit breaker or blown fuse. The light switch is “OFF”.
Vibrations	Check to assure that the appliance is level.
The unit seems to make too much noise.	The rattling noise may come from the flow of the refrigerant, which is normal. As each cycle ends, you may hear gurgling sounds caused by the flow of refrigerant in your unit. Contraction and expansion of the inside walls may cause popping and crackling noises. The appliance is not level.
The door will not close properly.	The appliance is not level. The gasket is dirty. The shelves are out of position.

NOTES

LIMITED WARRANTY

ONE-YEAR LIMITED WARRANTY

Within the 48 contiguous United States, for one year from the date of purchase, when this appliance is operated and maintained according to instructions attached to or furnished with the product, warrantor will pay for factory-specified parts and repair labor to correct defects in materials or workmanship. Service must be provided by a designated service company. Outside the 48 states, all parts are warranted for one year from manufacturing defects. Plastic parts, shelves and cabinets are warranted to be manufactured to commercially acceptable standards, and are not covered from damage during handling or breakage.

5-YEAR COMPRESSOR WARRANTY

1. The compressor is covered for 5 years.
2. Replacement does not include labor.

ITEMS WARRANTOR WILL NOT PAY FOR:

1. Service calls to correct the installation of your appliance, to instruct you how to use your appliance, to replace or repair fuses or to correct wiring or plumbing.
2. Service calls to repair or replace appliance light bulbs or broken shelves. Consumable parts (such as filters) are excluded from warranty coverage.
3. Damage resulting from accident, alteration, misuse, abuse, fire, flood, acts of God, improper installation, installation not in accordance with electrical or plumbing codes, or use of products not approved by warrantor.
4. Replacement parts or repair labor costs for units operated outside the United States.
5. Repairs to parts or systems resulting from unauthorized modifications made to the appliance.
6. Expenses for travel and transportation for product service in remote locations.
7. The removal and reinstallation of your appliance if it is installed in an inaccessible location or is not installed in accordance with published installation instructions.

DISCLAIMER OF IMPLIED WARRANTIES; LIMITATION OF REMEDIES

CUSTOMER'S SOLE AND EXCLUSIVE REMEDY UNDER THIS LIMITED WARRANTY SHALL BE PRODUCT REPAIR AS PROVIDED HEREIN. IMPLIED WARRANTIES, INCLUDING WARRANTIES OF MERCHANTABILITY OR FITNESS FOR A PARTICULAR PURPOSE, ARE LIMITED TO ONE YEAR. WARRANTOR SHALL NOT BE LIABLE FOR INCIDENTAL OR CONSEQUENTIAL DAMAGES. SOME STATES DO NOT ALLOW THE EXCLUSION OR LIMITATION OF INCIDENTAL OR CONSEQUENTIAL DAMAGES, OR LIMITATIONS ON THE DURATION OF IMPLIED WARRANTIES OF MERCHANTABILITY OR FITNESS, SO THESE EXCLUSIONS OR LIMITATIONS MAY NOT APPLY TO YOU. THIS WARRANTY GIVES YOU SPECIFIC LEGAL RIGHTS AND YOU MAY ALSO HAVE OTHER RIGHTS, WHICH VARY FROM STATE TO STATE.

WARNING! This product may contain chemicals known to the state of California to cause cancer or birth defects or other reproductive harm. For more information, visit: www.summitappliance.com/prop65

Chemicals known by the manufacturer to be present in this product in concentrations higher than threshold limits: NONE.

FELIX STORCH, INC.
770 Garrison Avenue
Bronx, NY 10474
Phone: (718) 893-3900
Fax: (718) 842-3093
www.summitappliance.com

SUMMIT
COMMERCIAL

For parts and accessory ordering, troubleshooting and helpful hints, visit:
www.summitappliance.com/support